| LONG SEAMS | |
|---|---|
| COURSE | ORIENTATION |
| 1(TOP) | 0° |
| 2 | 180° |
| 3 | 0° |

*VERT – TOP TO BOTTOM

Ship loose items:

(1 PC.) Swing gates (A71-24 (GALV.))
(1 PCs.) Caged Ladders w/ Hardware
(2 PCs.) Handrails w/ Hardware

Fall arrest system:

(1) Top & Bottom Bracket (PART# 6116631)
(1) Cable guide (PART# 6100400)
(1) 30' Cable (PART# 6104030)

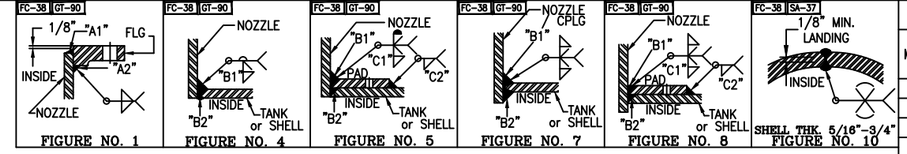


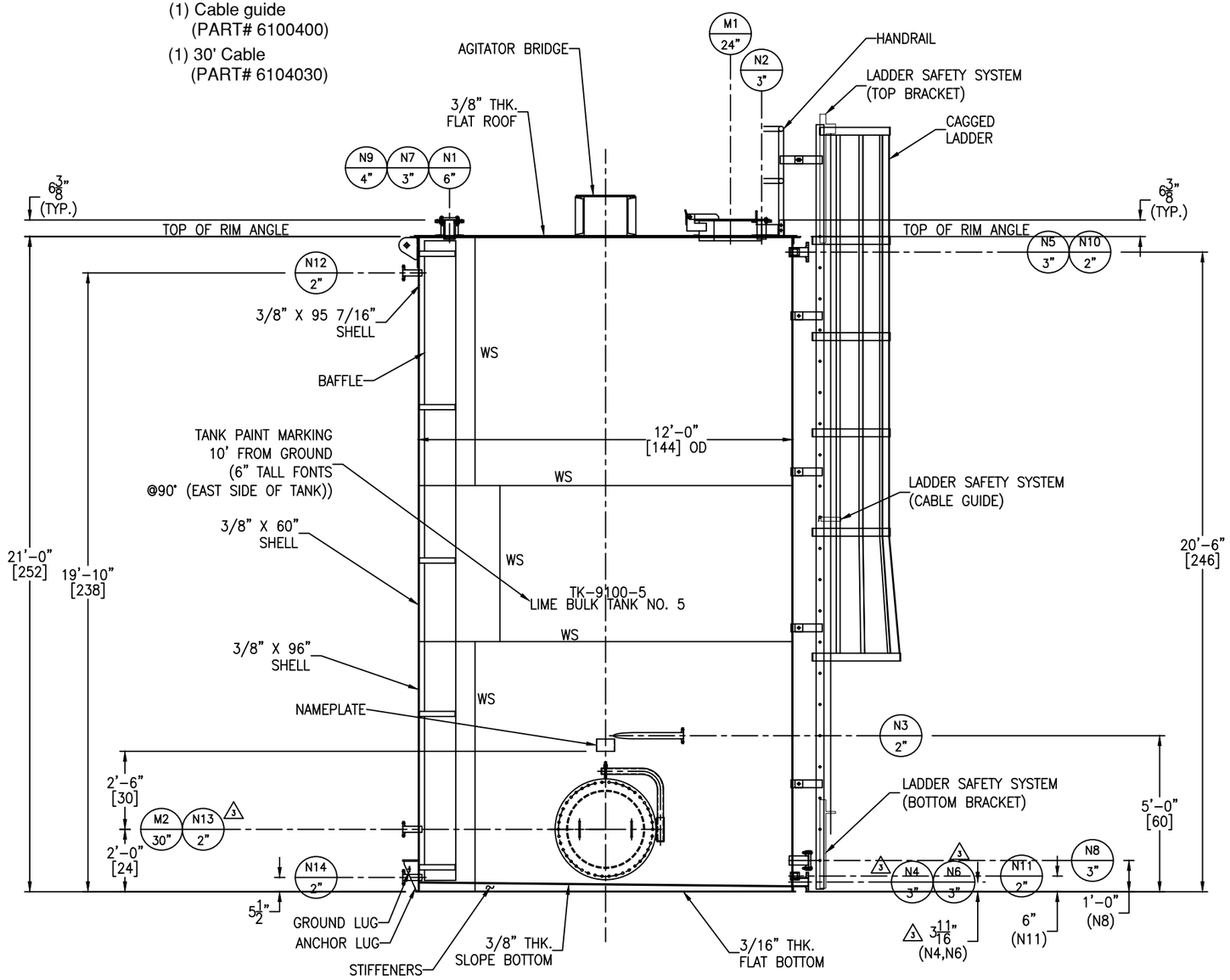


## NOZZLE SCHEDULE

| MARK | SERVICE | SIZE | RATING | TYPE / STYLE | NECK SCHED. | PROJECTION EXT. (℄) | PROJECTION INT. (MIN.) | WELD FIGURE | REPAD SIZE (WIDTH X THK.) | WELD SIZE "A1" | "A2" | "B1" | "B2" | "C1" | "C2" |
|---|---|---|---|---|---|---|---|---|---|---|---|---|---|---|---|
| N1 | VENT LINE | 6" | 150# | FFSO | 40S | SEE DWG | – | 1,5 | 2" X 3/16" | 1/4 | 1/4 | 1/4 | 1/8 | 3/16 | 3/16 |
| N2 | LIME FILL LINE | 3" | 150# | FFSO | 80S | SEE DWG | 1" | 1,8 | 2" X 3/16" | 5/16 | 5/16 | 1/4 | 1/8 | 3/16 | 3/16 |
| N3 | RECIRCULATION LINE | 2" | 150# | FFSO | 80S | SEE DWG | – | 1,4 | – | 3/16 | 3/16 | 1/4 | 1/8 | – | – |
| N4 | DRAIN LINE | 3" | 150# | FFSO | 80S | 6" | – | 1,5 | 2" X 3/16" DOG HOUSE SEE DWG | 5/16 | 5/16 | 1/4 | 1/8 | 3/16 | 3/16 |
| N5 | OVERFLOW LINE | 3" | 150# | FFSO | 80S | 6" | 1" | 1,7 | – | 5/16 | 5/16 | 1/4 | 1/4 | – | – |
| N6 | PUMP SUCTION | 3" | 150# | FFSO | 80S | 6" (3) | – | 1,5 | 2" X 3/16" DOG HOUSE SEE DWG | 5/16 | 5/16 | 1/4 | 1/8 | 3/16 | 3/16 |
| N7 | SPARE | 3" | 150# | FFSO W/ BLIND | 80S | SEE DWG | 1" | 1,8 | 2" X 3/16" | 5/16 | 5/16 | 1/4 | 1/8 | 3/16 | 3/16 |
| N8 | SPARE | 3" | 150# | FFSO W/ BLIND | 80S | 6" | 1" | 1,7 | – | 5/16 | 5/16 | 1/4 | 1/4 | – | – |
| N9 | INSTRUMENT CONN. | 4" | 150# | FFSO | 40S | SEE DWG | 1" | 1,8 | 2" X 3/16" | 1/4 | 1/4 | 1/4 | 1/8 | 3/16 | 3/16 |
| N10 | LEVEL SIGHT GLASS CONN. (TOP) | 2" | 3000# | FULL THRD CPLG | – | – | 1/2" | 7 | – | – | – | 1/4 | 1/8 | – | – |
| N11 | LEVEL SIGHT GLASS CONN. (BTM) | 2" | 3000# | FULL THRD CPLG | – | – | 1/2" | 7 | – | – | – | 1/4 | 1/8 | – | – |
| M1 | ROOF MANWAY | 24" | – | API W/ HINGE | 1/4" | SEE DWG | 1" | 8 | 2" X 3/16" | – | – | 1/4 | 1/8 | 3/16 | 3/16 |
| M2 | SHELL MANWAY | 30" | – | API W/ DAVIT | 3/8" | 6" | 1" | 7 | – | – | – | 1/4 | 1/4 | – | – |
| N12 | INSTRUMENT CONN.(LSHH) | 2" | 150# | FFSO | 80S | 6" | 1" | 1,7 | – | 3/16 | 3/16 | 1/4 | 1/8 | – | – |
| N13 | INSTRUMENT CONN.(LSLL) | 2" | 150# | FFSO | 80S | 6" | 1" | 1,7 | – | 3/16 | 3/16 | 1/4 | 1/8 | – | – |
| N14 | INSTRUMENT CONN.(LIT) | 2" | 150# | FFSO | 80S | 6" | 1" | 1,7 | – | 3/16 | 3/16 | 1/4 | 1/8 | – | – |

## MATERIALS OF CONSTRUCTION

| | VESSEL |
|---|---|
| SHELL | SA36 |
| FLAT TOP/BOTTOM | SA36 |
| RIM ANGLE | SA36 |
| NOZZLE NECKS | SA53B–ERW |
| NOZZLE FLANGES | SA105 |
| MANWAY NECKS | SA36 |
| MANWAY FLANGES | SA36 |
| GASKETS | GARLOCK 3000 |
| BOLTS/STUDS | SA193–B7 (ZINC PLATED) |
| NUTS | SA194–2H (ZINC PLATED) |
| REPADS | SA36 |
| COUPLINGS | SA105 |
| SUPPORTS/HOLD DOWNS | SA36 |
| LIFTING LUGS | SA36 |
| AGITATOR BRIDGE | SA36/A992 |
| MOUNTING PLATE | SA36 |
| GROUND LUG | SA36 |
| BAFFLE/BAFFLE SUPPORT | SA36 |
| LADDER | SA36 |
| TANK CLIPS (LADDER) | SA36 |
| HANDRAIL | SA500 |
| HANDRAIL CLIPS | SA36 |
| STIFFENERS | SA36 |
| PLATFORM CLIPS | – |
| DIPTUBE SUPPORT | – |
| JACKET SHELL | – |
| JACKET HEADS | – |
| JACKET NOZZLE NECKS | – |

## DESIGN DATA

| | VESSEL |
|---|---|
| DESIGN AND FAB. CODE | API650 |
| CERT. STAMP REQ'D. | NO |
| DESIGN PRESSURE | ATM |
| DESIGN TEMPERATURE | 120° F |
| MIN. DESIGN METAL TEMP. | 30° F @ ATM |
| OPERATING PRESSURE | ATM |
| OPERATING TEMPERATURE | 100° F |
| JOINT EFFICIENCY HEADS | 0.70 |
| JOINT EFFICIENCY SHELL | 0.70 |
| CORROSION ALLOWANCE | 0" |
| SPECIFIC GRAVITY | 1.21 |
| EARTHQUAKE ZONE | Ss = (0.26) S1 = (0.095) |
| WIND LOAD | 105 MPH |
| STRESS RELIEF | NOT REQ'D |
| RADIOGRAPHIC EXAM | NOT REQ'D |
| DYE PENETRANT EXAM | NOT REQ'D |
| MAGNETIC PARTICLE EXAM | NOT REQ'D |
| HYDROSTATIC TEST | – |
| PNEUMATIC TEST | 2 PSIG / GAUGE #1 |
| JKT DESIGN AND FAB. CODE | – |
| JKT CERT. STAMP REQ'D. | – |
| JKT DESIGN PRESSURE | – |
| JKT DESIGN TEMPERATURE | – |
| JKT MIN. DESIGN METAL TEMP. | – |
| JKT OPERATING PRESSURE | – |
| JKT OPERATING TEMPERATURE | – |
| JKT JOINT EFFICIENCY HEADS | – |
| JKT JOINT EFFICIENCY SHELL | – |

## VESSEL FINISH

| | |
|---|---|
| INTERIOR WELD TREATMENT: | SAV TANK STANDARD |
| EXTERIOR WELD TREATMENT: | SAV TANK STANDARD |
| SAV TANK FINISHING STANDARD: | N/A |
| INSULATION: | N/A |
| PAINTING/GALVANIZING: | SEE NOTE 6 |

## VESSEL CAPACITY AND WEIGHTS

| | |
|---|---|
| OPERATING CAPACITY | 16,000 GAL. |
| FULL CAPACITY | 17,300 GAL. |
| EMPTY SHIPPING WEIGHT (NO LADDER, HANDRAIL, AGITATOR) | 21,500 LBS. |
| WEIGHT FULL OF WATER | 167,200 LBS. |
| WEIGHT FULL OF PRODUCT | 197,600 LBS. |
| WEIGHT OF LADDER AND HANDRAILS | 1,100 LBS. |
| WEIGHT OF AGITATOR BRIDGE & AGITATOR (3) | 2,650 LBS. |

## QUALITY CONTROL

ENG. _____ DATE: _____

Q.C. _____ DATE: _____

This drawing is issued for customer approval. please review, make approval changes (if any) in red. check the appropriate box, sign & date.

- ☐ Approval – no changes. Please proceed with fabrication.
- ☐ Approved as noted. Please proceed with fabrication
- ☐ Not approved. Please make changes and resubmit.

Customer signature _____ Date _____

## GENERAL NOTES

1.) COVER ALL FLANGES, OPENINGS & MACHINED SURFACES PRIOR TO SHIPMENT UNLESS OTHERWISE NOTED.
2.) BOLT HOLES TO STRADDLE 0° & 180° UNLESS OTHERWISE NOTED.
3.) NOZZLE REPADS TO HAVE (1) ø1/4" NPT TELL-TALE HOLES ON HORIZONTAL CENTER LINE. ALL OTHER REPADS TO HAVE (1) ø1/4" WEEP HOLE AT LOWEST POINT ON PAD.
4.) MANUFACTURING TOLERANCE TO BE IN ACCORDANCE WITH API STANDARD 650 7.5.
5.) ASME MATERIALS TO CONFORM TO THE FOLLOWING: FLANGES – B16.5, FITTINGS – B16.9 & COUPLINGS – B16.11.
6.) PAINTING VESSEL EXTERIOR – SANDBLAST SP6. (2) COAT TNEMEC n69 (6 MILS DFT) & (1) COAT TNEMEC n73 (2.5 MILS DFT) WHITE. (3) GALVANIZING: UPPER LADDER, LOWER LADDER, ROOF HANDRAILS, REST PLATFORM, REST PLATFORM HANDRAILS & GRATING TO BE HOT DIPPED GALVANIZED.

## (1) REVISIONS

| REV | D.BY | C.BY | DATE | DESCRIPTION |
|---|---|---|---|---|
| | | | | AS BUILT |
| 3 | RS | – | 4/30/25 | CERTIFIED |
| 2 | AD | RS | 3/20/25 | APPROVAL REV 2 |
| 1 | AD | RS | 2/10/25 | APPROVAL REV 1 |
| 0 | RS | AD | 12/19/24 | APPROVAL |


Savannah Tank & Equipment Corp.
1517 Telfair Road, Savannah, GA 31415
(912) 233–8902


DRAWN BY: RS
CHK'D BY: AD
APPROVED BY: NP
SCALE: 3/8" = 1'–0"

RIVER TO TAP
LIME BULK TANK(TANK #5)
EQUIP. #TK–9100–5
CUST. PO # G0080008.46

DRAWING NO.: 069–24–1 SHT 1 OF 9 REV. SET 3

LONG SEAMS

| COURSE | ORIENTATION |
|---|---|
| 1(TOP) | 0° |
| 2 | 180° |
| 3 | 0° |

*VERT – TOP TO BOTTOM

Ship loose items:

(1 PC.) Swing gates (A71-24 (GALV.))
(1 PCs.) Caged Ladders w/ Hardware
(2 PCs.) Handrails w/ Hardware

Fall arrest system:

(1) Top & Bottom Bracket
(PART# 6116631)

(1) Cable guide
(PART# 6100400)

(1) 30' Cable
(PART# 6104030)

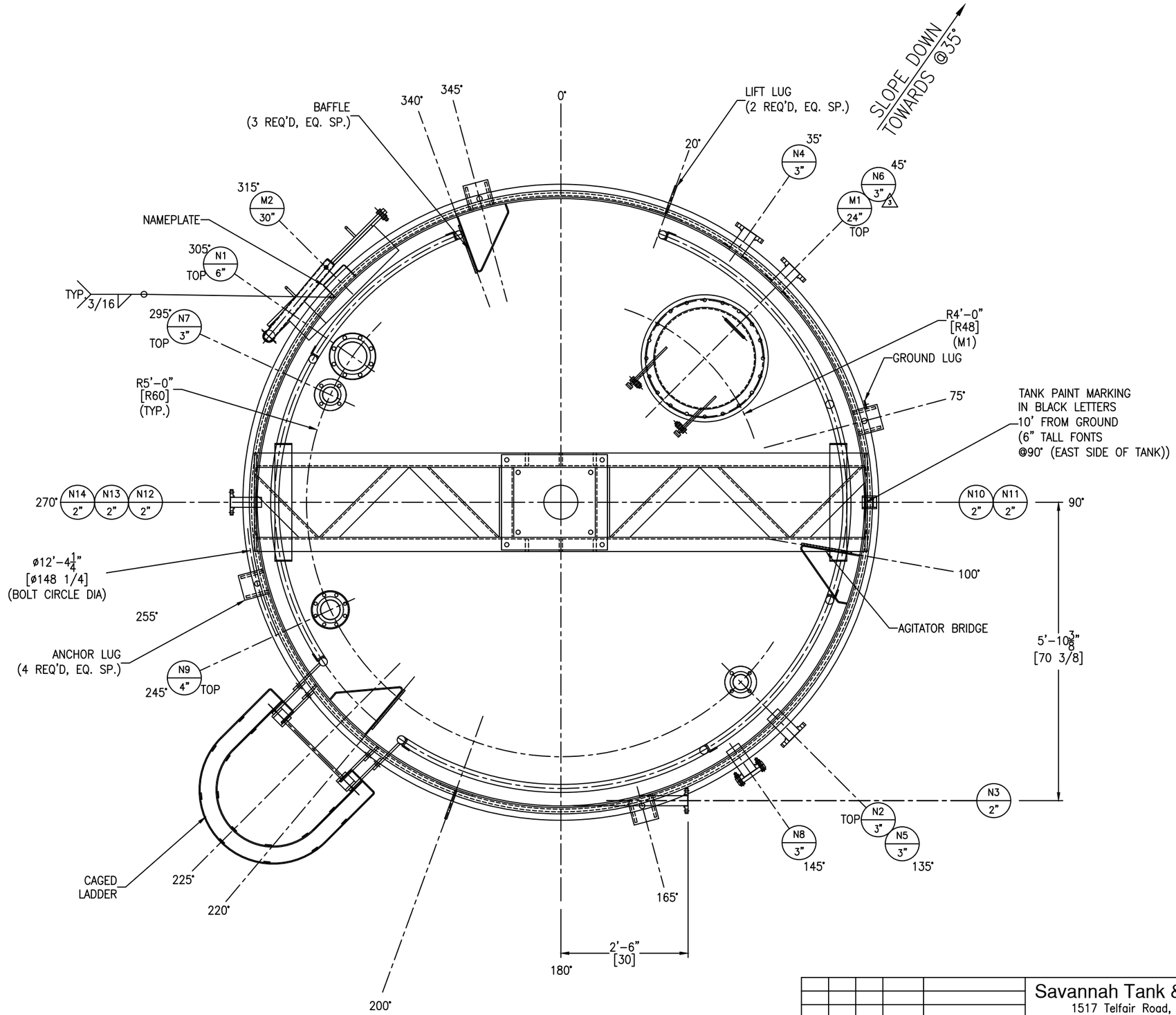


| REV | D.BY | C.BY | DATE | DESCRIPTION |
|---|---|---|---|---|
| | | | | AS BUILT |
| 3 | RS | – | 4/30/25 | CERTIFIED |
| 2 | AD | RS | 3/20/25 | APPROVAL REV 2 |
| 1 | AD | RS | 2/10/25 | APPROVAL REV 1 |
| 0 | RS | AD | 12/19/24 | APPROVAL |

1 REVISIONS


Savannah Tank & Equipment Corp.
1517 Telfair Road, Savannah, GA 31415
(912) 233-8902


DRAWN BY: RS
CHK'D BY: AD
APPROVED BY: NP
SCALE: 3/4" = 1'-0"

RIVER TO TAP
LIME BULK TANK(TANK #5)
EQUIP. #TK-9100-5
CUST. PO # G0080008.46

DRAWING NO.: 069-24-2 SHT 2 OF 9 REV. SET 3

FC-38

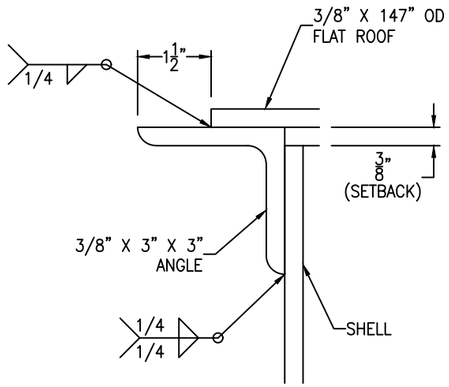


RIM ANGLE DETAIL

SCALE: 6" = 1'-0"

FC-38

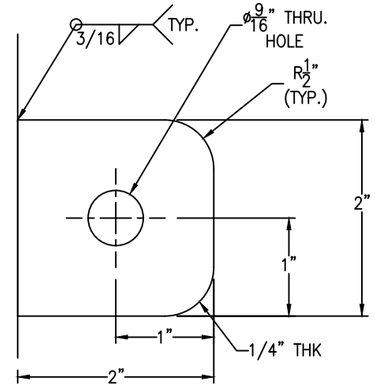


G.L IS LOCATED @75°.

GROUND LUG DETAIL

(1 REQ'D) SCALE: 1'-0" = 1'-0"

FC-38

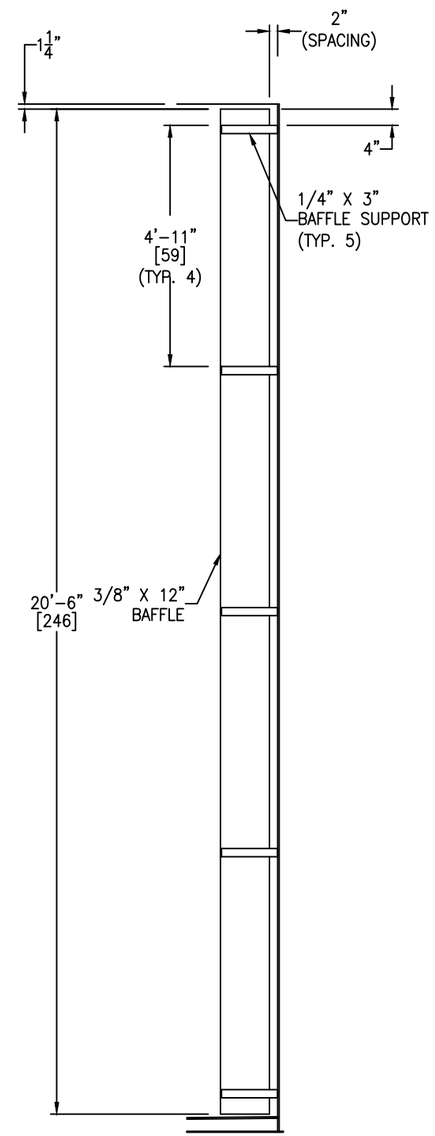


BAFFLE DETAIL

(3 REQ'D) SCALE: 1/2" = 1'-0"

FC-38

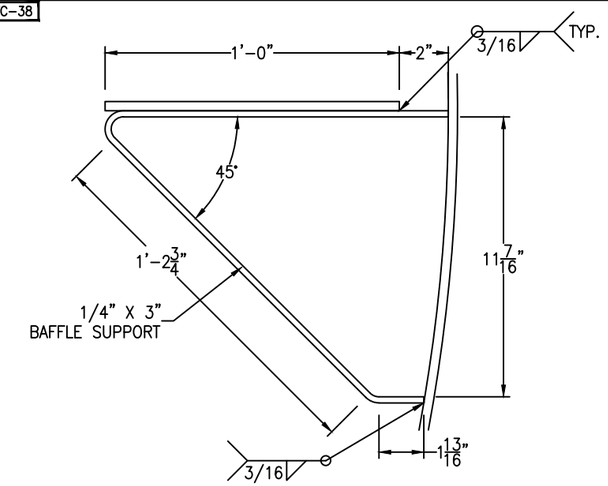


BAFFLE SUPPORT DETAIL

(15 REQ'D) SCALE: 3" = 1'-0"

FC-38

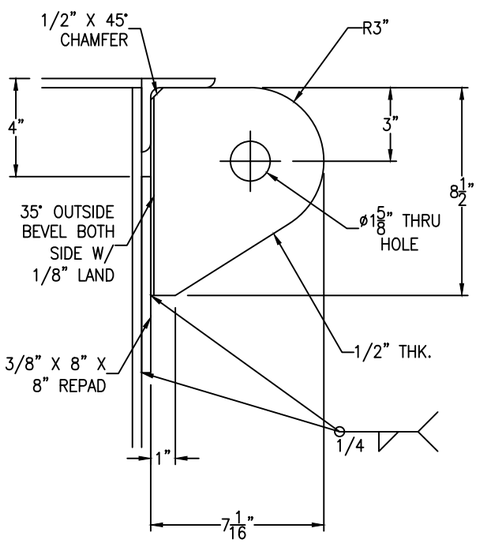


LIFT LUG DETAIL

(2 REQ'D) SCALE: 3" = 1'-0"

FC-38

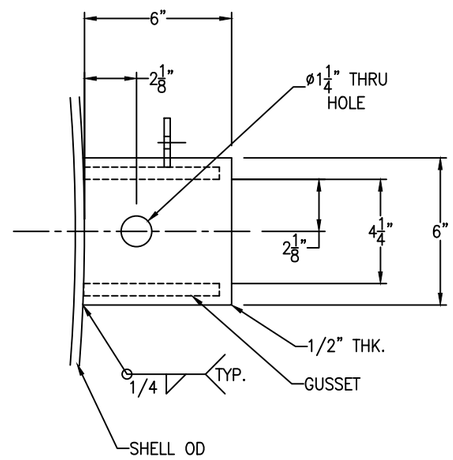


FC-38

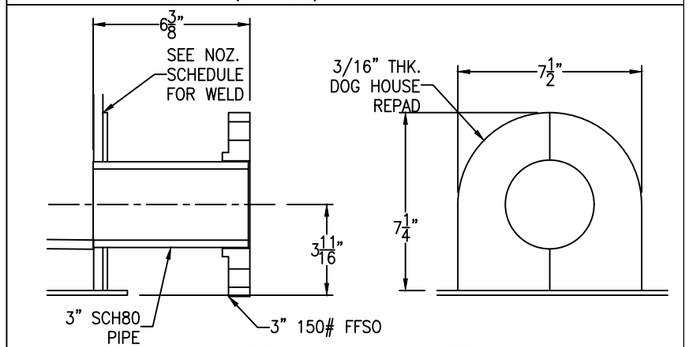


△3 NOZZLE N4, N6 DETAIL

(2 REQ'D) SCALE: 3" = 1'-0"

FC-38

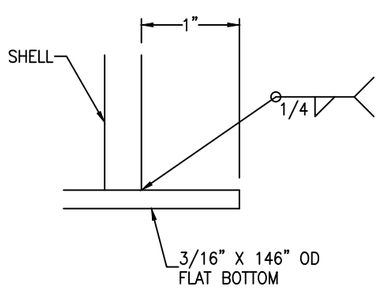


FLAT BOTTOM DETAIL

SCALE: 1'-0" = 1'-0"

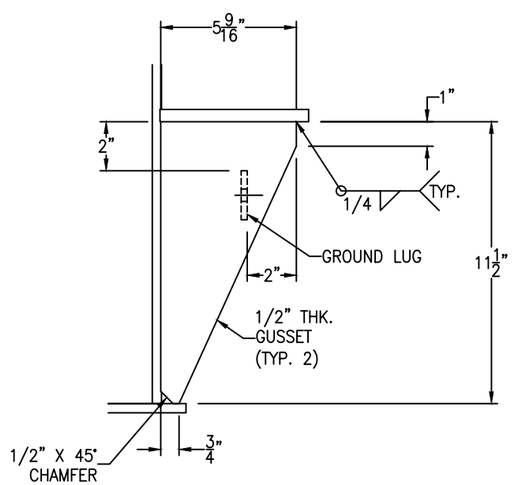


ANCHOR LUG DETAIL

(4 REQ'D) SCALE: 3" = 1'-0"

Bolting for blinds
N7, N8: (4+4) 5/8"-11 NC x 3" HH BOLT
(4+4) 5/8"-11 NC HH NUT
(1+1) FULL FACE GASKET, 1/8" THK. X
7 1/2" OD X 3 1/2" ID W/ (4) 3/4" DIA
HOLES ON 6" BOLT CIRCLE.

| REV | D.BY | C.BY | DATE | DESCRIPTION |
|---|---|---|---|---|
| | | | | AS BUILT |
| 3 | RS | – | 4/30/25 | CERTIFIED |
| 2 | AD | RS | 3/20/25 | APPROVAL REV 2 |
| 1 | AD | RS | 2/10/25 | APPROVAL REV 1 |
| 0 | RS | AD | 12/19/24 | APPROVAL |

△1 REVISIONS


Savannah Tank & Equipment Corp.
1517 Telfair Road, Savannah, GA 31415
(912) 233-8902


DRAWN BY: RS
CHK'D BY: AD
APPROVED BY: NP
SCALE: 3/8" = 1'-0"

RIVER TO TAP
LIME BULK TANK(TANK#5)
EQUIP. #TK-9100-5
CUST. PO # G0080008.46

DRAWING NO.: 069-24-3 SHT 3 OF 9 REV. SET 3

FC-38

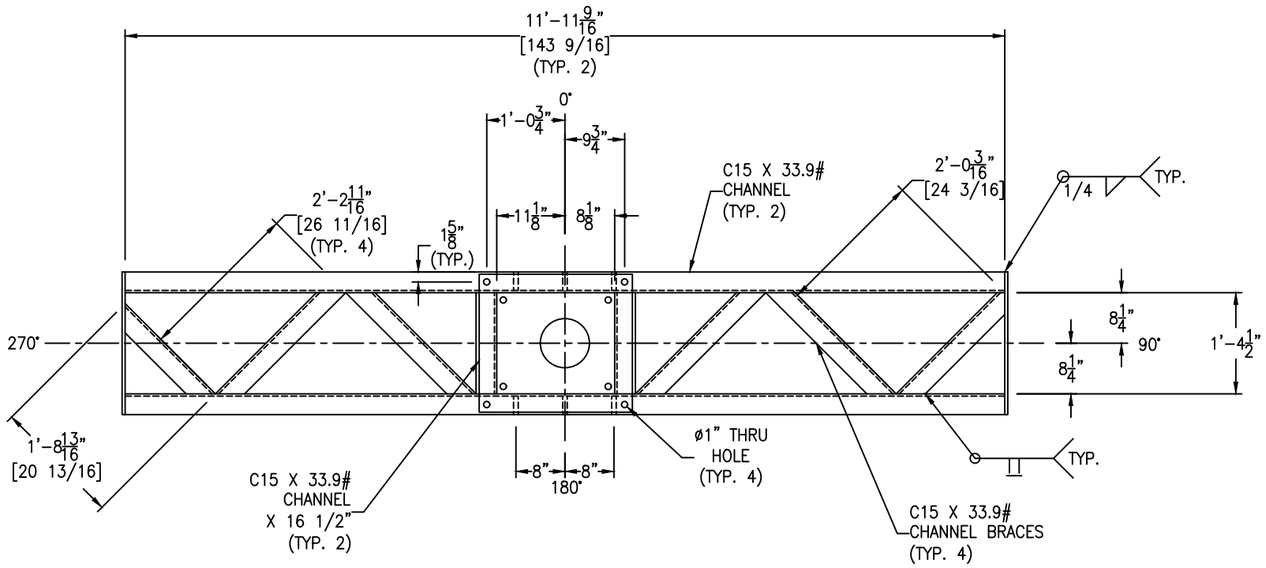


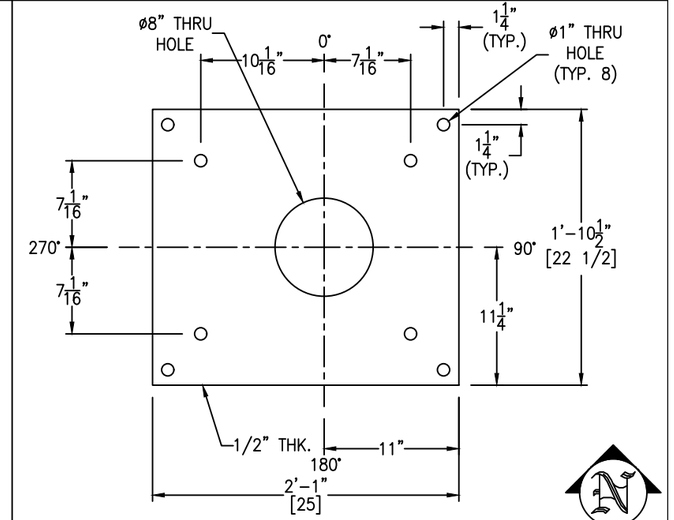


MOUNTING PLATE DETAIL

SCALE: 1 1/2" = 1'-0"

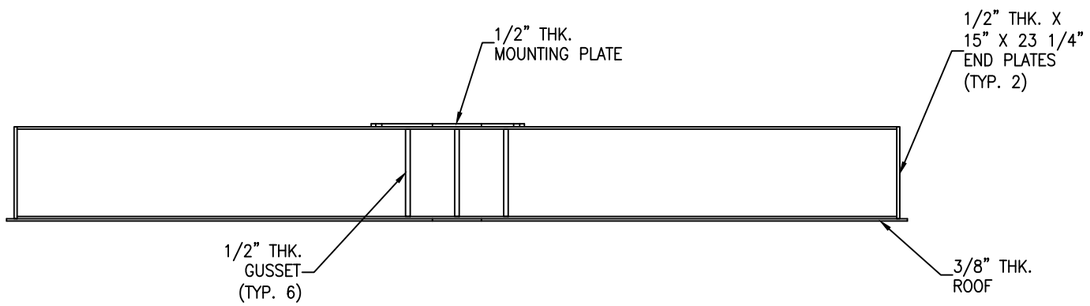


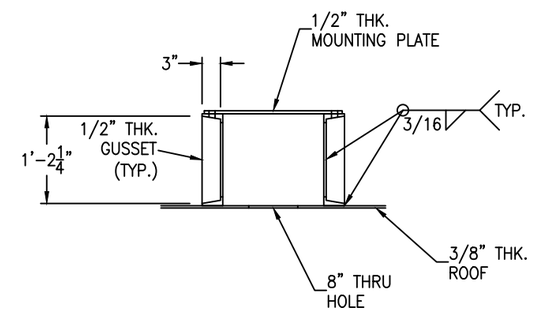


AGITATOR BRIDGE DETAIL

SCALE: 3/4" = 1'-0"

Bolting for mountng plate:
(4) 7/8"-9 NC x 2" HH BOLT
(4) 7/8"-9 NC HH NUT

***** NOTE: CONCENTRATED LOAD ON THE BRIDGE NOT TO EXCEED 11000 LBF.*****

| REV | D.BY | C.BY | DATE | DESCRIPTION |
|---|---|---|---|---|
| | | | | AS BUILT |
| 3 | RS | – | 4/30/25 | CERTIFIED |
| 2 | AD | RS | 3/20/25 | APPROVAL REV 2 |
| 1 | AD | RS | 2/10/25 | APPROVAL REV 1 |
| 0 | RS | AD | 12/19/24 | APPROVAL |

⚠ REVISIONS


Savannah Tank & Equipment Corp.
1517 Telfair Road, Savannah, GA 31415
(912) 233-8902


DRAWN BY: RS
CHK'D BY: AD
APPROVED BY: NP
SCALE: 3/8" = 1'-0"

RIVER TO TAP
LIME BULK TANK(TANK #5)
EQUIP. #TK-9100-5
CUST. PO # G0080008.46

DRAWING NO.: 069-24-4 SHT 4 OF 9 REV. SET 3

FC-38

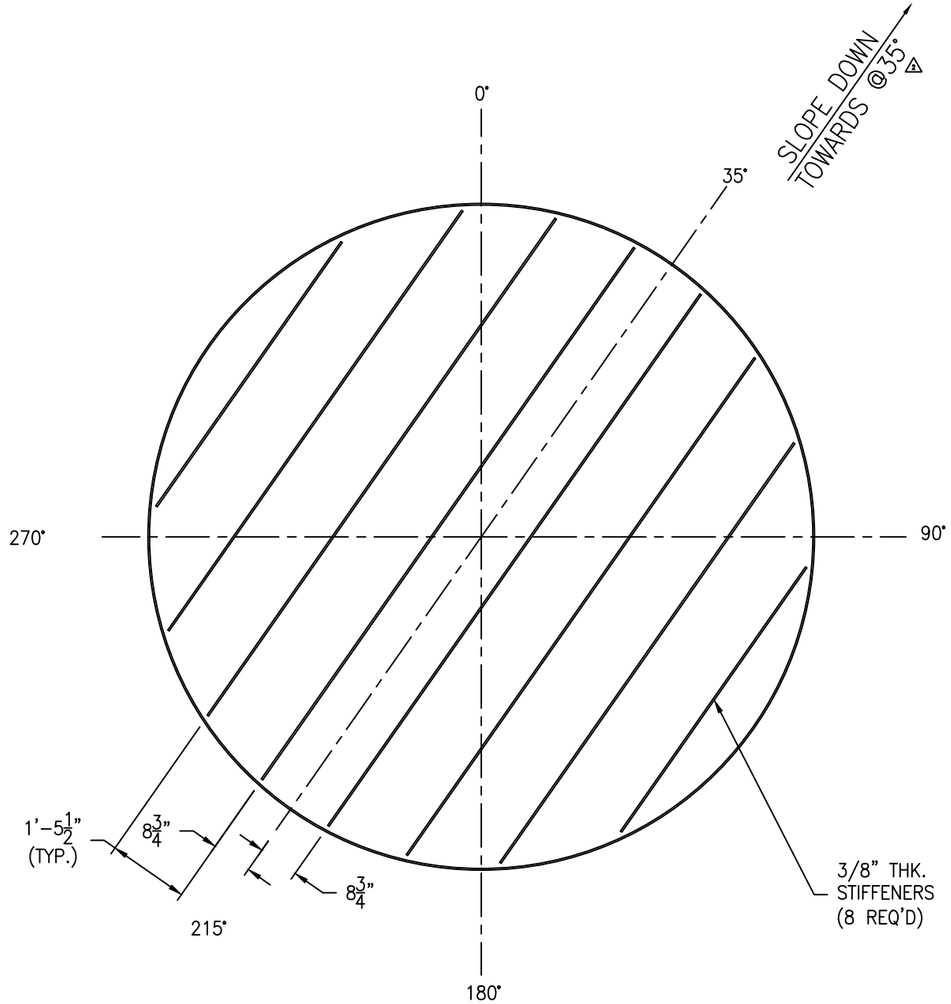


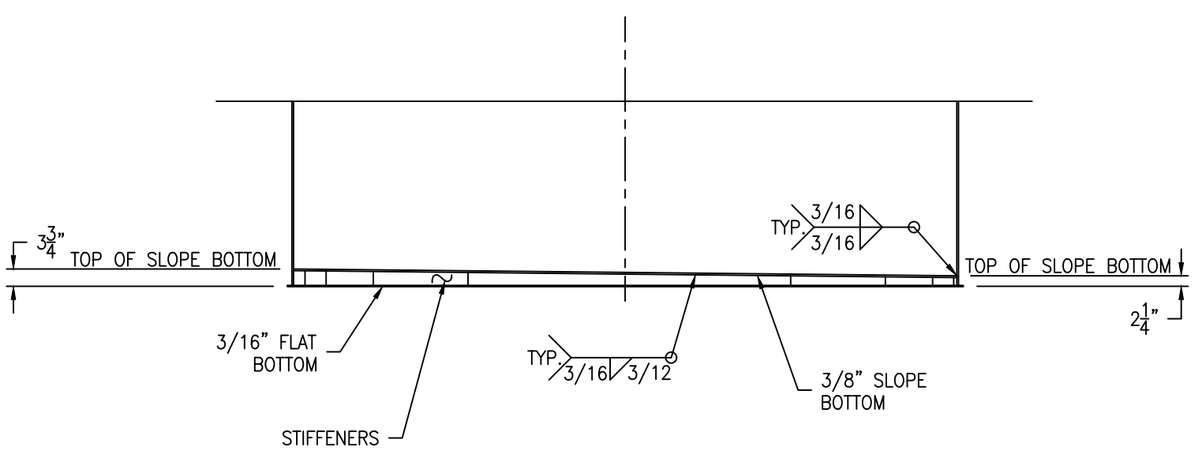


## △2 SLOPE BOTTOM DETAIL

SCALE: 1/2" = 1'-0"

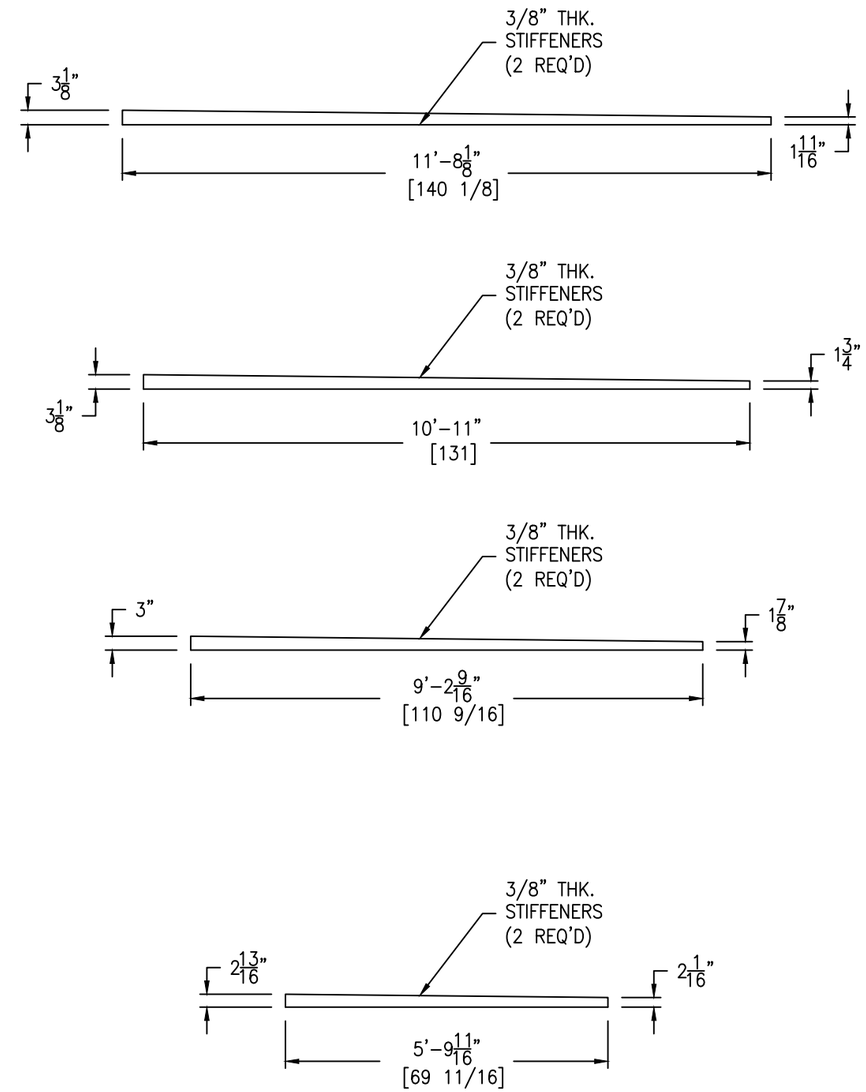


## STIFFENER DETAIL

SCALE: 1/2" = 1'-0"

| REV | D.BY | C.BY | DATE | DESCRIPTION |
|---|---|---|---|---|
| | | | | AS BUILT |
| 3 | RS | – | 4/30/25 | CERTIFIED |
| 2 | AD | RS | 3/20/25 | APPROVAL REV 2 |
| 1 | – | – | – | APPROVAL REV 1 |
| 0 | – | – | – | APPROVAL |

△1 REVISIONS


Savannah Tank & Equipment Corp.
1517 Telfair Road, Savannah, GA 31415
(912) 233-8902


DRAWN BY: RS
CHK'D BY: AD
APPROVED BY: NP
SCALE: 3/8" = 1'-0"

RIVER TO TAP
LIME BULK TANK(TANK #5)
EQUIP. # TK-9100-5
CUST. PO # G0080008.46

DRAWING NO.: 069-24-5 SHT 5 OF 9 REV. SET 3

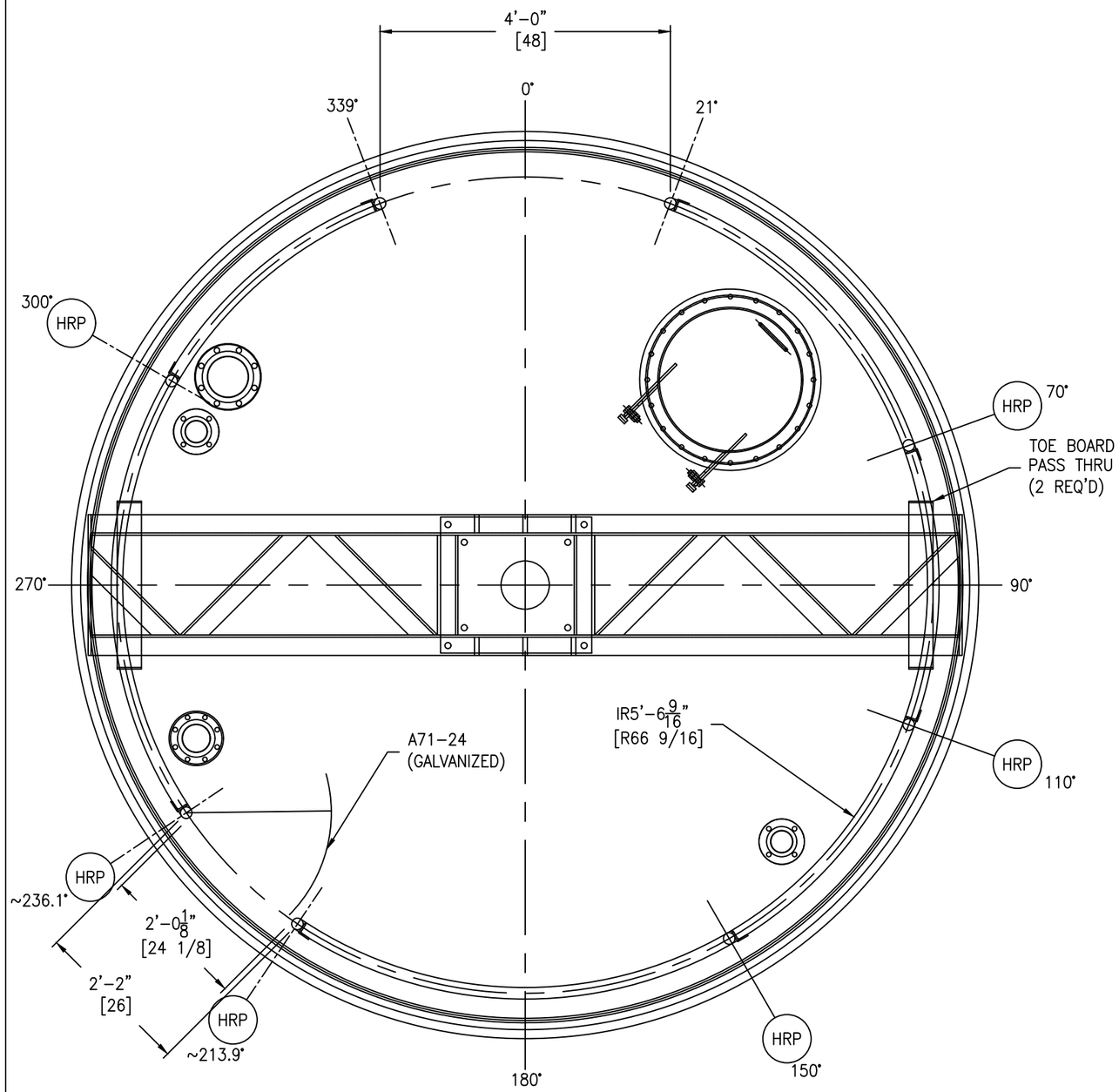


SCALE: 3/4" = 1'-0"

HANDRAIL BOLTING:
(16) 1/2-13 NC X 3" HH BOLT - SA193-B7 (ZINC PLATED)
(16) 1/2-13 NC HH NUT - SA194-2H (ZINC PLATED)

GM-73

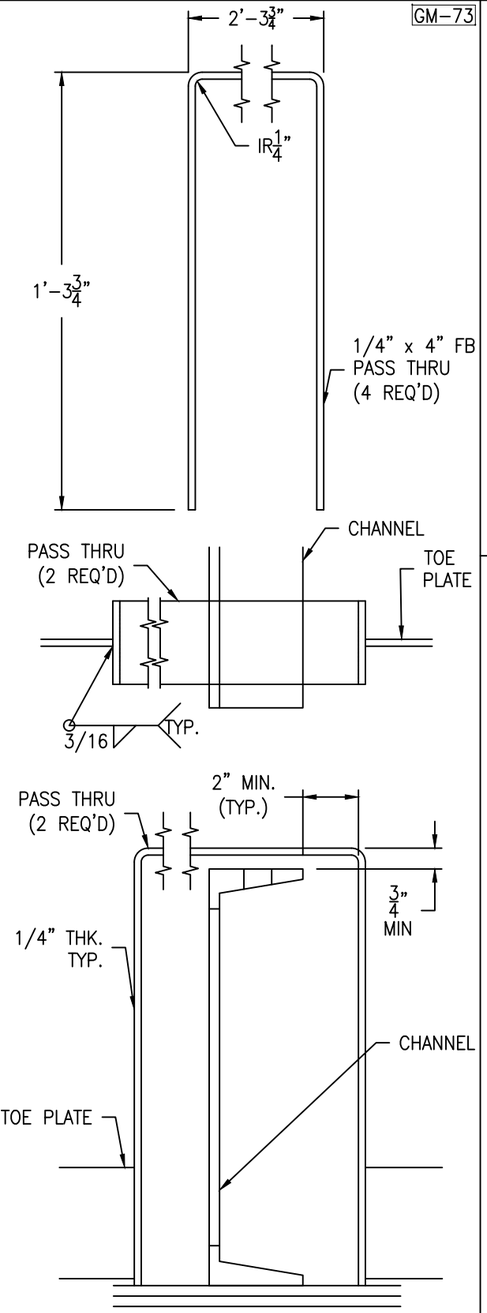


TOE PLATE BREAK DETAIL

(2 REQ'D) SCALE: 3" = 1'-0"

GM-73

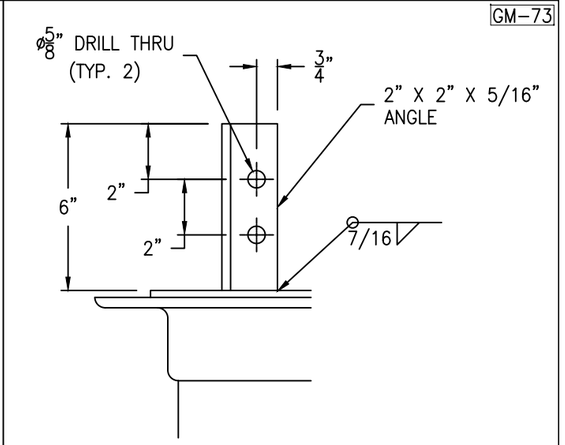


3 POST CLIP DETAIL

(8 REQ'D) SCALE: 3" = 1'-0"

GM-73

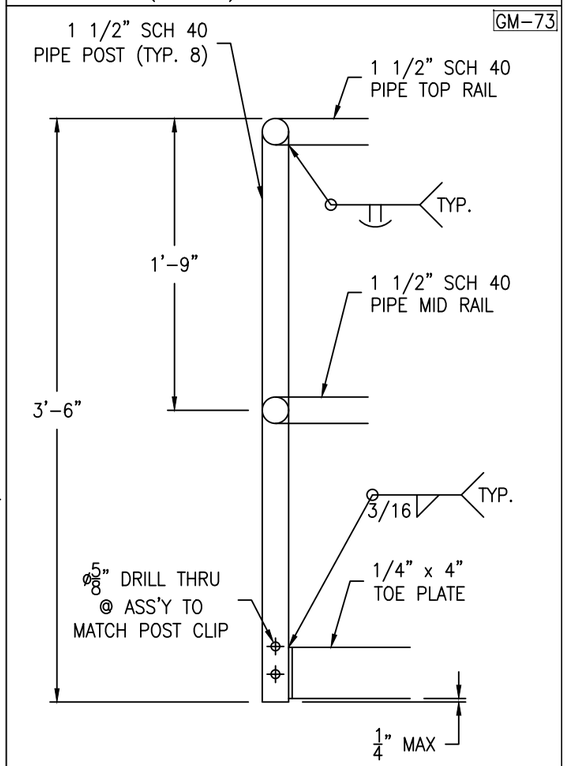


HANDRAIL DETAIL

SCALE: 1 1/2" = 1'-0"

HANDRAIL TO BE HOT-DIPPED GALVANIZED

| REV | D.BY | C.BY | DATE | DESCRIPTION |
|---|---|---|---|---|
| | | | | AS BUILT |
| 3 | RS | - | 4/30/25 | CERTIFIED |
| 2 | AD | RS | 3/20/25 | APPROVAL REV 2 |
| 1 | AD | RS | 2/10/25 | APPROVAL REV 1 |
| 0 | RS | AD | 12/19/24 | APPROVAL |

1 REVISIONS


Savannah Tank & Equipment Corp.
1517 Telfair Road, Savannah, GA 31415
(912) 233-8902


DRAWN BY: RS
CHK'D BY: AD
APPROVED BY: NP
SCALE: 3/8" = 1'-0"

RIVER TO TAP
LIME BULK TANK(TANK #5)
EQUIP. # TK-9100-5
CUST. PO # G0080008.46

DRAWING NO.: 069-24-6 SHT 6 OF 9 REV. SET 3

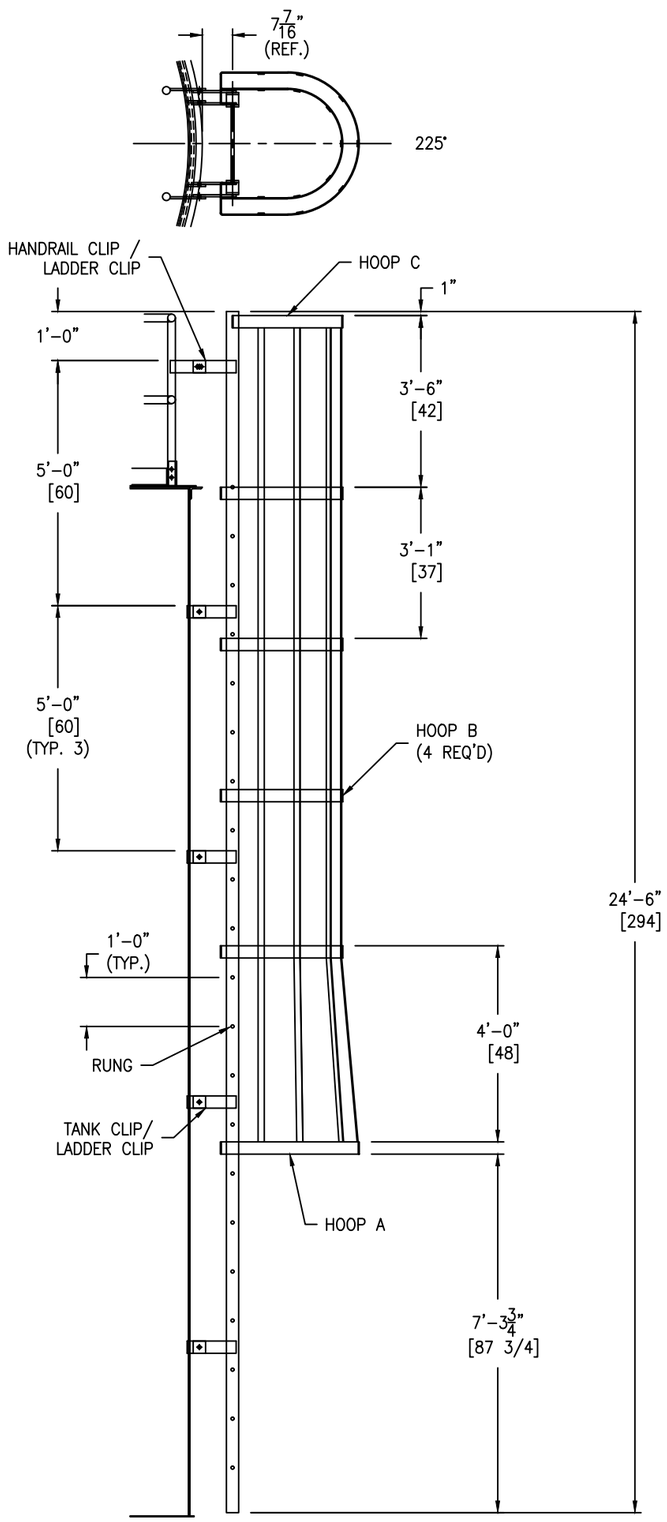


LADDER DETAIL

SCALE: 1/2" = 1'-0"

GM-73

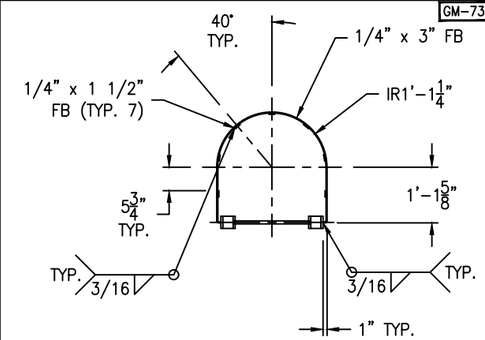


HOOP "C" DETAIL

(1 REQ'D) SCALE: 1/2" = 1'-0"

GM-73

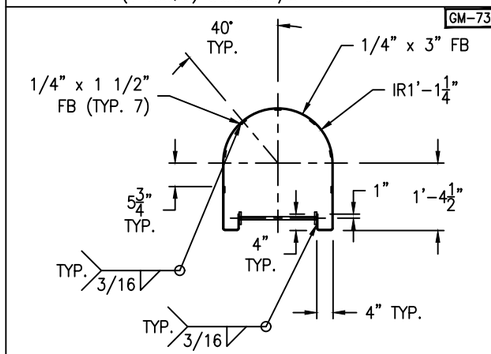


HOOP "B" DETAIL

(4 REQ'D) SCALE: 1/2" = 1'-0"

GM-73

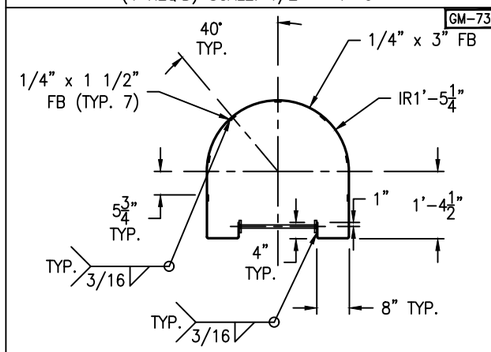


HOOP "A" DETAIL

(1 REQ'D) SCALE: 1/2" = 1'-0"

GM-73

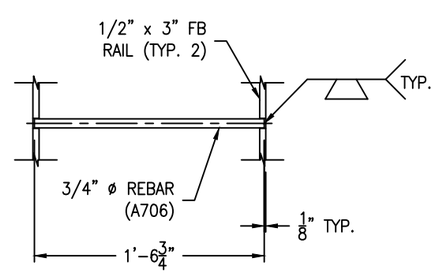


RUNG DETAIL

(21 REQ'D) SCALE: 1 1/2" = 1'-0"

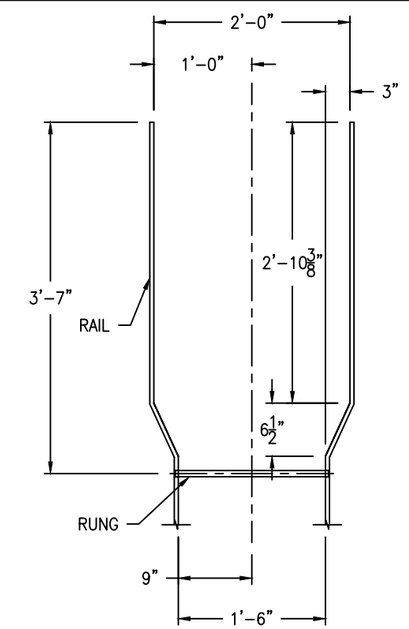


WALK-THRU DETAIL

SCALE: 1" = 1'-0"

FC-38

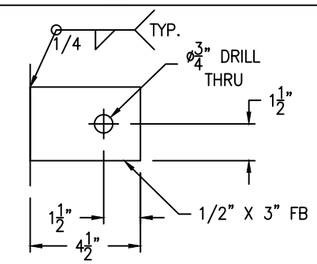


TANK CLIP DETAIL

(8 REQ'D) SCALE: 3" = 1'-0"

GM-73

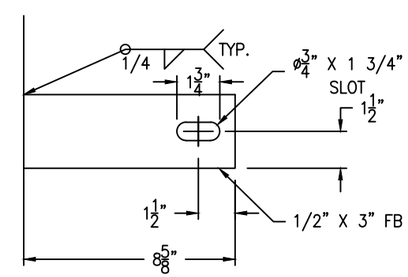


HANDRAIL CLIP DETAIL

(2 REQ'D) SCALE: 3" = 1'-0"

GM-73

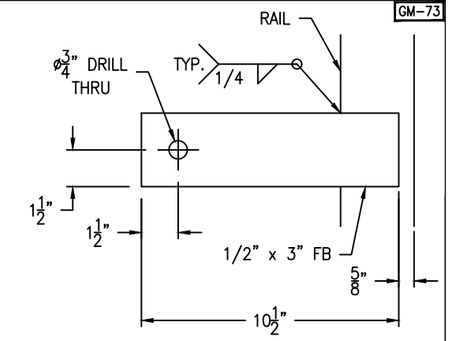


LADDER CLIPS DETAIL

(10 REQ'D) SCALE: 3" = 1'-0"

LADDER CLIP BOLTING:
(10) 5/8-11 NC X 2" HH BOLT - SA193-B7 (ZINC PLATED)
(10) 5/8-11 NC HH NUT - SA194-2H (ZINC PLATED)

Fall arrest system:
(1) Top & Bottom Bracket (PART# 6116631)
(1) Cable guide (PART# 6100400)
(1) 30' Cable (PART# 6104030)

LADDER TO BE HOT-DIPPED GALVANIZED

| REV | D.BY | C.BY | DATE | DESCRIPTION |
|---|---|---|---|---|
| | | | | AS BUILT |
| 3 | RS | - | 4/30/25 | CERTIFIED |
| 2 | AD | RS | 3/20/25 | APPROVAL REV 2 |
| 1 | AD | RS | 2/10/25 | APPROVAL REV 1 |
| 0 | RS | AD | 12/19/24 | APPROVAL |

⚠ REVISIONS


Savannah Tank & Equipment Corp.
1517 Telfair Road, Savannah, GA 31415
(912) 233-8902


DRAWN BY: RS
CHK'D BY: AD
APPROVED BY: NP
SCALE: 1/4" = 1'-0"

RIVER TO TAP
LIME BULK TANK(TANK #5)
EQUIP. #TK-9100-5
CUST. PO # G0080008.46

DRAWING NO.: 069-24-7 | SHT 7 OF 9 | REV. SET 3

FC-38

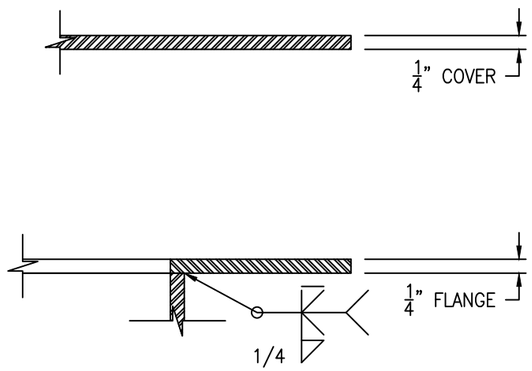


## FLANGE/COVER DETAIL

(1 REQ'D) SCALE: 6" = 1'-0"

FC-38

Bolting for blind
(20) 5/8-11 NC x 1 1/2" HH BOLT
(20) 5/8-11 NC HH NUT
(1) 30" OD x 24" ID x 1/8" GASKET
W/ (20) 3/4" DIA. THRU HOLES EQUALLY SPACED ON 27 1/2" BC

Bolting for hinge
(2) 3/4-10 NC x 2 1/2" HH BOLT
(4) 3/4-10 NC HH NUT

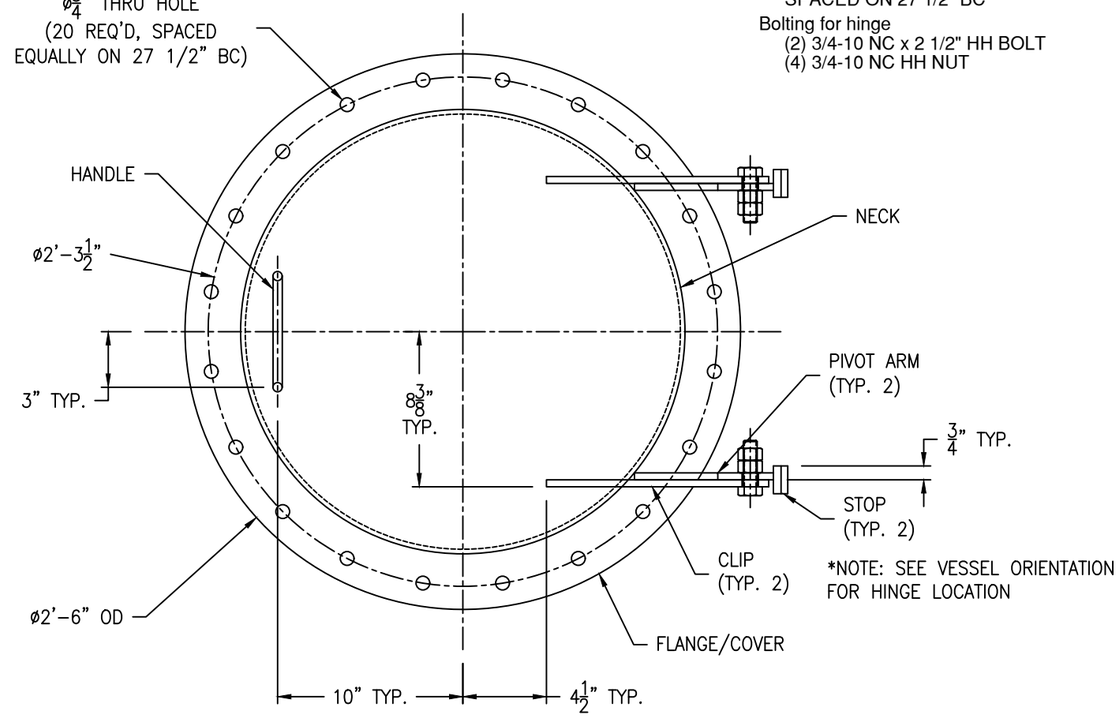


*NOTE: SEE VESSEL ORIENTATION FOR HINGE LOCATION

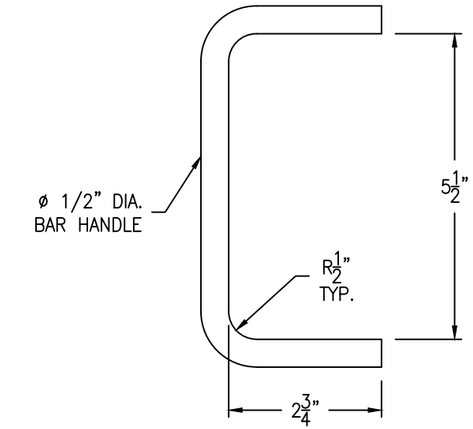


## HANDLE DETAIL

(1 REQ'D) SCALE: 6" = 1'-0"

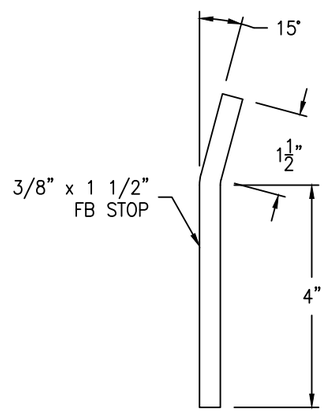


## STOP DETAIL

(2 REQ'D) SCALE: 6" = 1'-0"

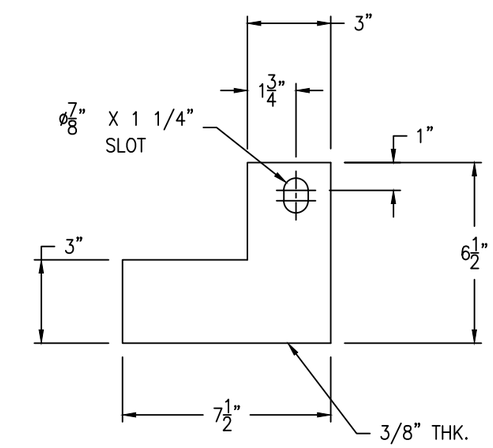


## PIVOT ARM DETAIL

(2 REQ'D) SCALE: 3" = 1'-0"

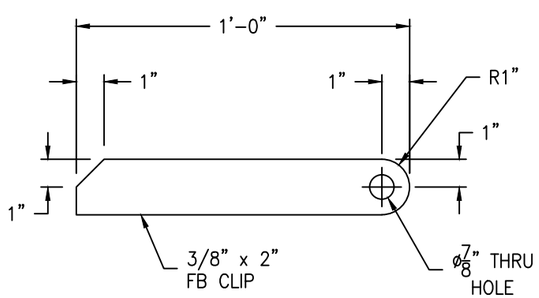


## CLIP DETAIL

(2 REQ'D) SCALE: 3" = 1'-0"

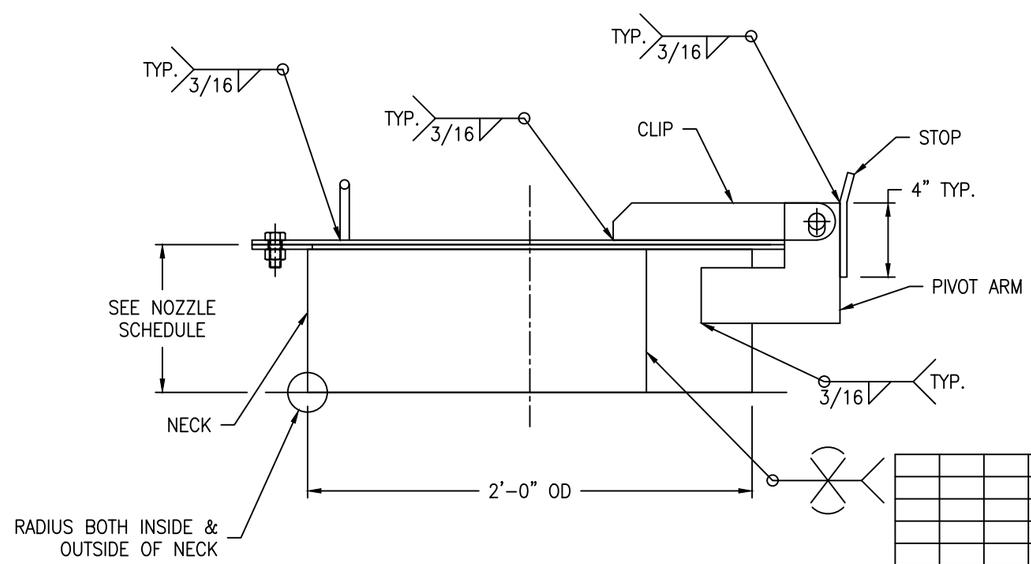


| REV | D.BY | C.BY | DATE | DESCRIPTION |
|---|---|---|---|---|
| | | | | AS BUILT |
| 3 | RS | – | 4/30/25 | CERTIFIED |
| 2 | AD | RS | 3/20/25 | APPROVAL REV 2 |
| 1 | AD | RS | 2/10/25 | APPROVAL REV 1 |
| 0 | RS | AD | 12/19/24 | APPROVAL |

1 REVISIONS


Savannah Tank & Equipment Corp.
1517 Telfair Road, Savannah, GA 31415
(912) 233-8902


DRAWN BY: RS
CHK'D BY: AD
APPROVED BY: NP
SCALE: 2" = 1'-0"

RIVER TO TAP
LIME BULK TANK(TANK #5)
EQUIP. #TK-9100-5
CUST. PO # G0080008.46

DRAWING NO.: 069-24-8 | SHT 8 OF 9 | REV. SET 3

FC-38

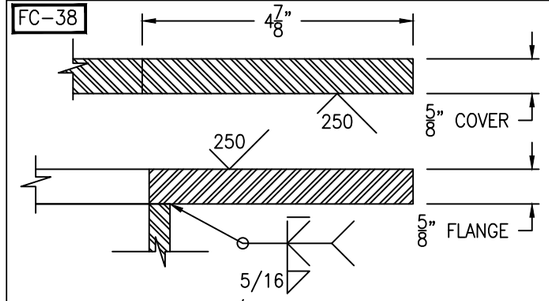


FLANGE/COVER DETAIL

(1 REQ'D) SCALE: 6" = 1'-0"

FC-38

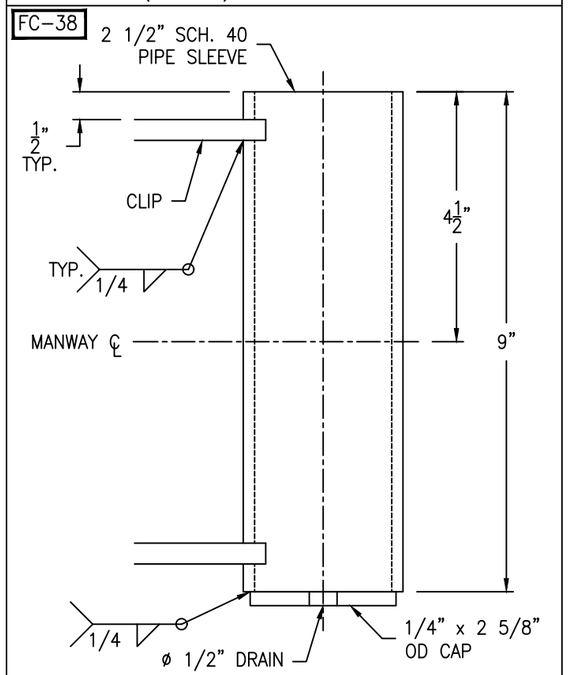


SLEEVE DETAIL

(1 REQ'D) SCALE: 6" = 1'-0"

FC-38

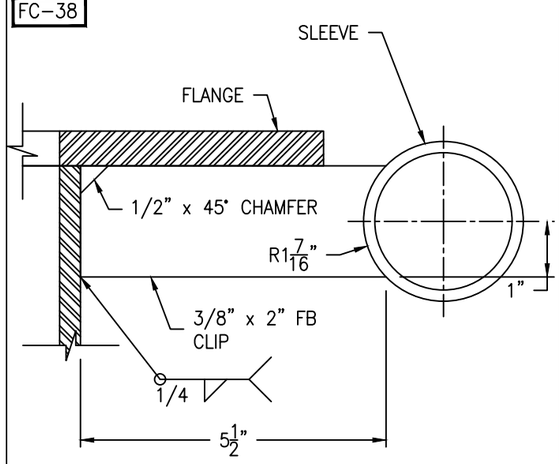


CLIP DETAIL

(2 REQ'D) SCALE: 6" = 1'-0"

FC-38

Bolting for blind
(42) 3/4-10 NC x 3" HH BOLT
(42) 3/4-10 NC HH NUT
(1) 35 3/8" OD x 30" ID x 1/8" GASKET

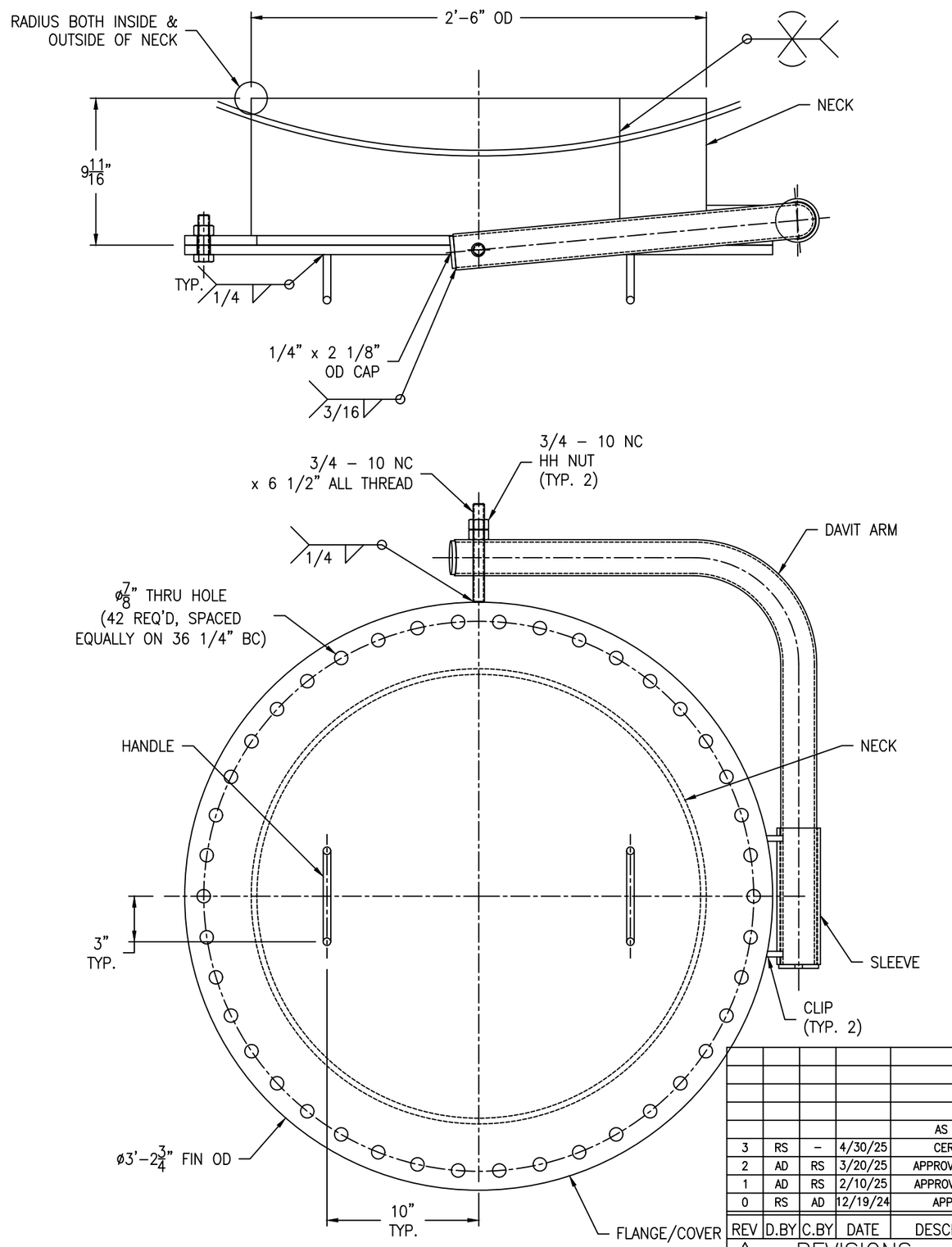


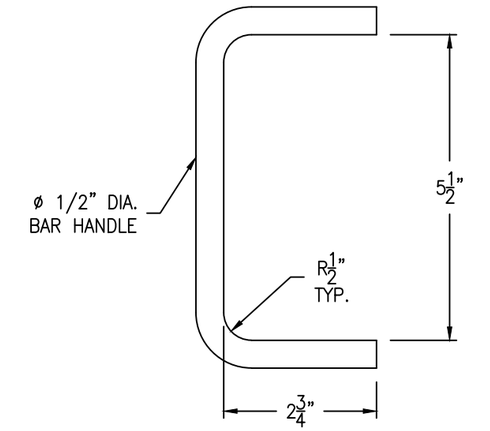


HANDLE DETAIL

(2 REQ'D) SCALE: 6" = 1'-0"

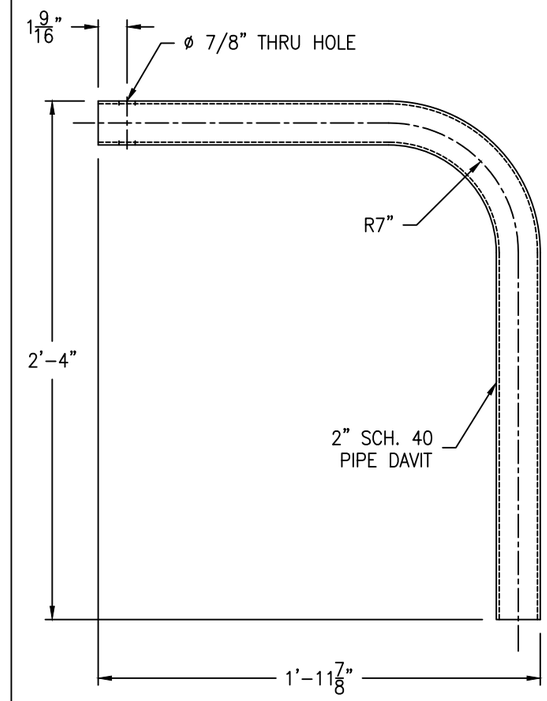


DAVIT ARM DETAIL

(1 REQ'D) SCALE: 2" = 1'-0"

| REV | D.BY | C.BY | DATE | DESCRIPTION |
|---|---|---|---|---|
| | | | | AS BUILT |
| 3 | RS | – | 4/30/25 | CERTIFIED |
| 2 | AD | RS | 3/20/25 | APPROVAL REV 2 |
| 1 | AD | RS | 2/10/25 | APPROVAL REV 1 |
| 0 | RS | AD | 12/19/24 | APPROVAL |

1 REVISIONS


Savannah Tank & Equipment Corp.
1517 Telfair Road, Savannah, GA 31415
(912) 233-8902


DRAWN BY: RS
CHK'D BY: AD
APPROVED BY: NP
SCALE: 2" = 1'-0"

RIVER TO TAP
LIME BULK TANK(TANK #5)
EQUIP. #TK-9100-5
CUST. PO # G0080008.46

DRAWING NO.: 069-24-9 SHT 9 OF 9 REV. SET 3